ΜΕΙΩΤΕΣ ΠΙΕΣΗΣ ΠΥΡΟΣΒΕΣΗΣ

MODELS **90G-21** **90A-21**

Fire Protection Pressure Reducing Valve

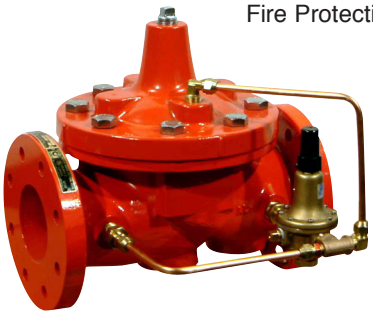

90-21 UL Listed
Fire Protection Valve

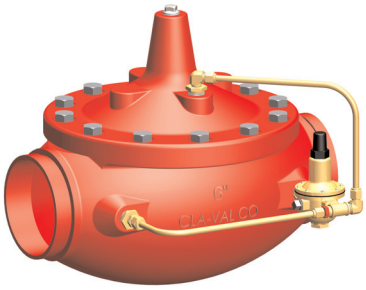

90-21 UL Listed
Grooved End
Fire Protection Valve

MEA Approved

Special System Water Control Valves – Class II
UL Product Category VLMT – File No. Ex 2534

- **U.L. Listed, ULC Listed, MEA Approved**
- **Globe or Angle Pattern**
- **Proven Reliable Design**
- **Available in Cast Bronze, Ductile Iron and Cast Steel**
- **Accurate Pressure Control**
- **In Line Service**
- **Grooved Ends (1 1/2" - 6")**

Cla-Val 90G-21 (globe) and 90A-21 (angle) Pressure Reducing Valves are indispensable in any fire protection system. Our diaphragm actuated design is proven highly reliable and easy to maintain. We offer both a globe or angle pattern with a full range of adjustments. These valves are also available in a variety of material options. Epoxy coating is strongly recommended for all fire system valves (excluding bronze valves). The 90G-21 and 90A-21 can be supplied with optional internal and external epoxy coating of the main valve wetted surfaces.

Function

Cla-Val 90G-21 (globe) and 90A-21 (angle) Pressure Reducing Valves automatically reduce a higher inlet pressure to a steady lower outlet pressure regardless of changing flow rate and/or varying inlet pressure. The valves pilot control system is very sensitive to slight downstream pressure fluctuations, and will automatically open or close to maintain the desired pressure setting. The downstream pressure can be set over a wide range by turning the adjustment screw on the CRD pilot control. The adjustment screw is protected by a screw-on cover, which can be sealed to discourage tampering.

Schematic Diagram

Item	Description
1	Model 100-01 Hytrol (Globe or Angle)
2	X58C Restriction Tube Fitting
3	CRD Pressure Reducing Control
4	X46A Flow Clean Strainer

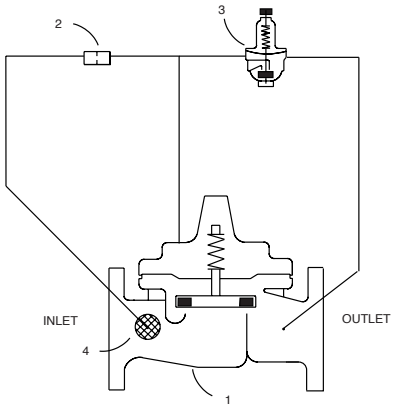

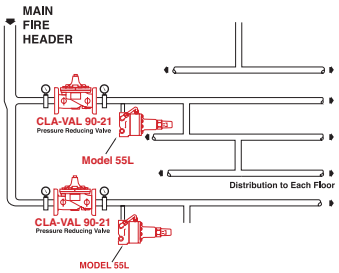

Typical Application

Underwriters Laboratories requires the installation of pressure gauges upstream and downstream of the Pressure Reducing Valve.
Also, a relief valve of not less than 1/2 inch in size must be installed on the downstream side of the pressure control valve. Adequate drainage for the relief valve discharge must be provided.

UL / ULC Listings

Size	Ductile Iron 150# F	Ductile Iron 300# S	Ductile Iron 300 # F	Bronze 300# Threaded	Bronze 150# F	Bronze 300# F	Cast Steel 300# F	Globe Pattern Ductile Iron Grooved End	Angle Pattern Ductile Iron Grooved End
1 1/2"	UL / ULC	UL / ULC	UL	UL / ULC				UL	
2"	UL / ULC	UL / ULC	UL / ULC	UL / ULC	ULC	ULC	UL	UL	UL
2 1/2"	UL / ULC	ULC	UL / ULC	UL / ULC	ULC	ULC	UL	UL	
3"	UL / ULC	UL / ULC	UL / ULC	UL / ULC	ULC	ULC	UL	UL	UL
4"	UL / ULC		UL / ULC		ULC	ULC	UL	UL	UL
6"	UL / ULC		UL / ULC				UL	UL	
8"	UL / ULC		UL/ULC						
10"	ULC		ULC						

CHRYSSAFIDIS

CLA-VAL

Dimensions

VALVE SIZE (inches)	1½ "	2"	2½"	3"	4"	6"	8"	10"
A THREADED	7.25	9.38	11.00	12.50	—	—	—	—
AA 150 ANSI	8.50	9.38	11.00	12.00	15.00	20.00	25.38	29.75
AAA 300 ANSI	9.00	10.00	11.62	13.25	15.62	21.00	26.38	31.12
AAAA GROOVED	8.50	9.00	11.00	12.50	15.00	20.00	25.38	—
B	1.12	1.50	1.69	2.56	3.19	4.31	5.31	9.25
BB GROOVED	1.94	2.13	2.50	6.00	4.13	6.00	7.25	—
C (MAX)	5.50	6.50	7.56	8.19	10.62	13.38	16.00	17.12
CC (MAX) GROOVED	4.10	5.00	6.88	6.50	8.80	11.10	14.50	—
D	2.81	3.31	4.00	4.56	5.75	7.88	10.00	11.81
DD GROOVED	2.81	3.31	4.00	4.56	5.75	7.88	10.00	—
E THREADED	3.25	4.75	5.50	6.25	—	—	—	—
EE 150 ANSI	4.00	4.75	5.50	6.00	7.50	10.00	12.75	14.88
EEE 300 ANSI	4.25	5.00	5.88	6.38	7.88	10.50	13.25	15.56
EEEE GROOVED	—	4.75	—	6.00	7.50	10.00	—	—
F THREADED	1.88	3.25	4.00	4.50	—	—	—	—
FF 150 ANSI	4.00	3.25	4.00	4.00	5.00	6.00	8.00	8.62
FFF 300 ANSI	4.25	3.50	4.31	4.38	5.31	6.50	8.50	9.31
FFFF GROOVED	—	3.25	—	4.50	5.00	6.00	—	—
G (MAX)	7.50	7.75	7.75	8.00	9.00	9.50	10.50	11.50
GG (MAX)	8.10	8.00	–	8.13	9.31	10.50	11.50	

VALVE SIZE (mm)	40	50	65	80	100	150	200	250
A THREADED	184	238	279	318	—	—	—	—
AA 150 ANSI	216	238	279	305	381	508	645	756
AAA 300 ANSI	229	254	295	337	397	533	670	790
AAAA GROOVED	216	228	279	318	381	508	645	—
B	28	38	43	65	81	109	135	235
BB GROOVED	52	54	73	6.00	4.13	6.00	184	—
C (MAX)	140	161	192	208	270	340	406	435
CC (MAX) GROOVED	104	127	175	165	223	281	369	—
D	71	84	102	116	146	200	254	300
DD GROOVED	71	84	102	116	146	200	254	—
E THREADED	83	121	140	159	—	—	—	—
EE 150 ANSI	102	121	140	152	191	254	324	378
EEE 300 ANSI	108	127	149	162	200	267	349	395
EEEE GROOVED	—	121	—	152	191	254	—	—
F THREADED	48	83	102	114	—	—	—	—
FF 150 ANSI	102	83	102	102	127	152	203	219
FFF 300 ANSI	108	89	109	111	135	165	216	236
FFFF GROOVED	—	121	—	114	127	152	—	—
G (MAX)	191	197	197	203	228	241	267	292
GG (MAX)	206	203	–	207	236	267	292	—

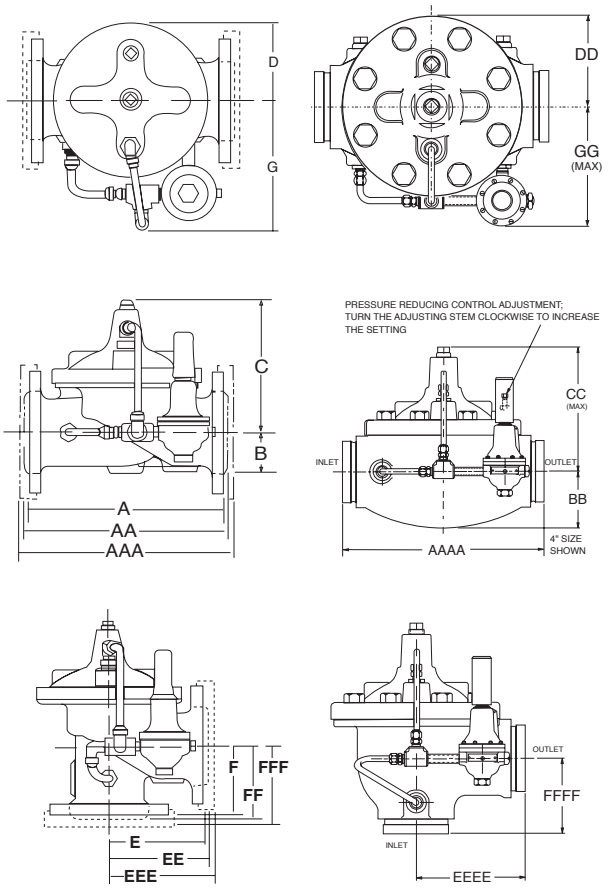

Selection Guidelines

Flow Capacity Table

Valve Size	Maximum Flow Rate (GPM of Water)
1½"	160
2"	262
2½"	373
3"	576
4"	992
6"	2251
8"	3900
10"	6150

Size: **175 lb. Class** **1 1/2" - 8" (Globe)**
2" - 6" (Angle)
300 lb. Class **1 1/2" - 8" (Globe)**
2" - 6" (Angle)

End Details:
150 ANSI B16.42 (Ductile Iron)
(Bronze)
300# (Ductile Iron)
300# (Cast Steel).
300# (Ductile Grooved End).

Pressure Differential: 10 PSI Min.

Pressure Adjustment Range:
175 lb. Class 30 – 165 psi
300 lb. Class 30 – 165 psi

Temperature Range: Water to 180°F Max.

Materials

Main valve body & cover:
Ductile Iron - ASTM A536

Main valve internal trim:
Bronze ASTM B61

Pilot control system–
Pilot control valve:
Bronze ASTM B62 with
Stainless Steel 303 internal trim

Copper tubing with brass fittings

Main valve and pilot valve
diaphragm and disc:
Buna-N® synthetic rubber

SPECIAL NOTE: THE MODEL 90-21 CAN BE SUPPLIED WITH INTERNAL EPOXY COATING OF THE MAIN VALVE. THIS OPTION IS U.L. FILE NO. EX2855, C.C. NO. HNFX EPOXY COATING IS STRONGLY RECOMMENDED FOR ALL CAST VALVES.

When Ordering Please Specify

1. Model Number 90-21
2. Size
3. Globe or Angle Pattern
4. Main Valve Body and Cover Material
5. Threaded, Flanged or Grooved
6. Pressure Class
7. Optional Epoxy Coating (specify with suffix "KC)

CLA-VAL™

E-90G-21 (R-1-07)

CHRYSSAFIDIS